System: - Alu-XL
- Wood-Premium/- Design Flex
- Poly-Metallic
- Poly-Color 8mm

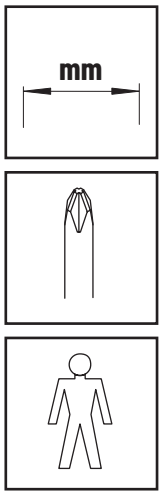

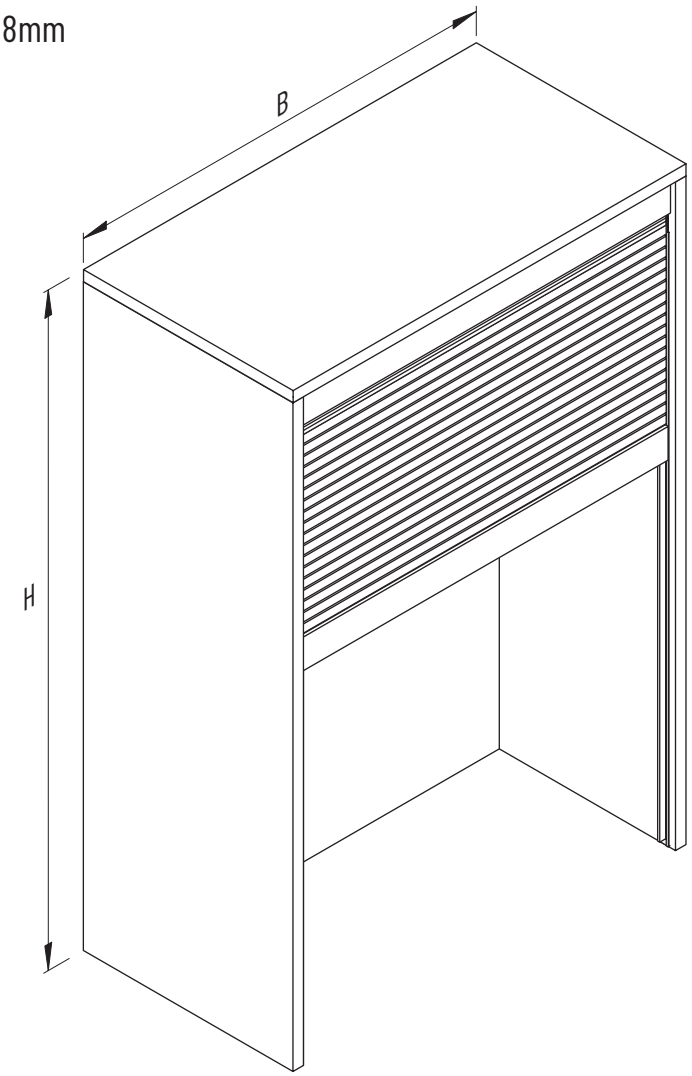

	Wood-Premium/-Designflex, Poly-Metallic, Poly-Decor Alu/Wood, Poly-Color		
	min. **B**	max. **B**	max. **H**
300.7581 Top-Lift **XS**	400	700	1600
300.7583 Top-Lift **S**	600	900	1600
300.7584 Top-Lift **M**	800	1100	2100
300.7871 Top-Lift **L**	900	1200	2200

	Alu-XL		
	min. **B**	max. **B**	max. **H**
300.7581 Top-Lift **XS**	400	700	1600
300.7584 Top-Lift **M**	500	800	2100
300.7871 Top-Lift **L**	600	1000	2200
300.7876 Top-Lift **XL**	800	1200	2200

- **Poly-Decor Alu/Wood**
- **Poly-Color**

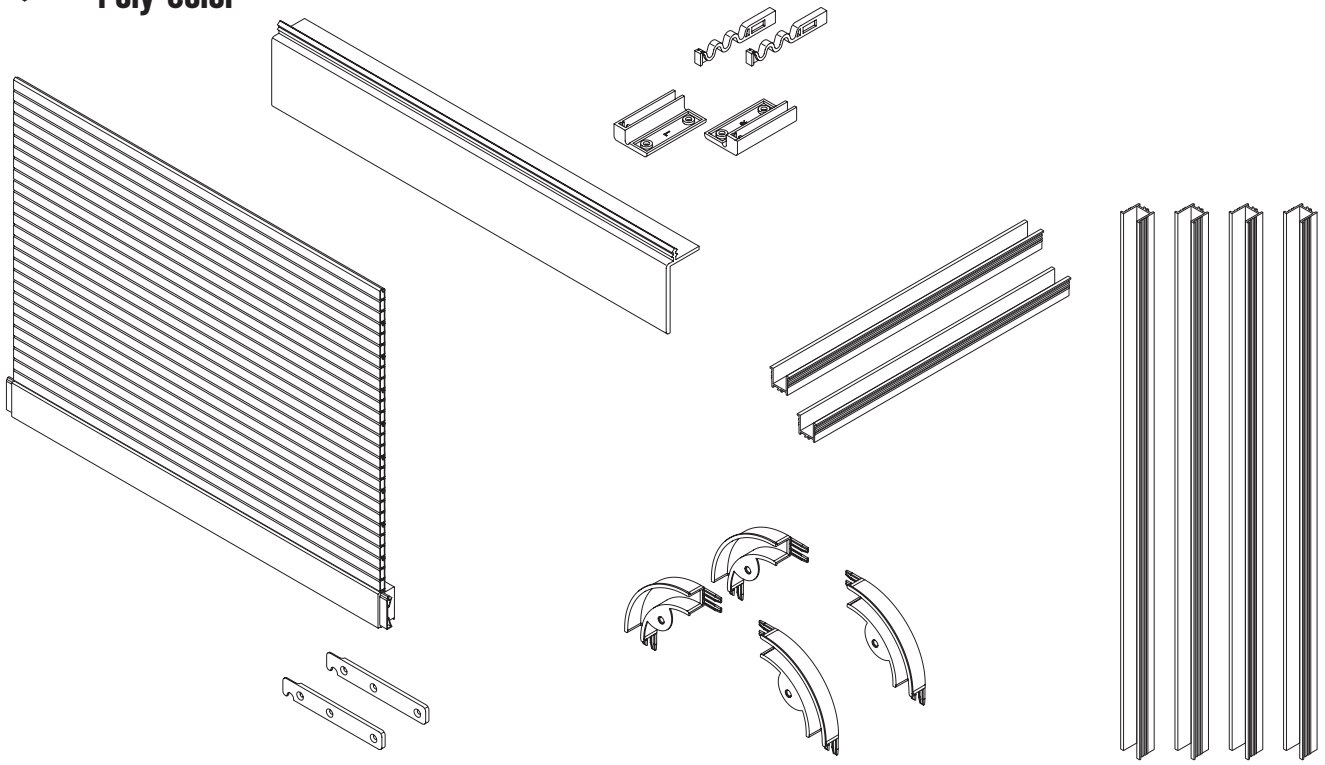

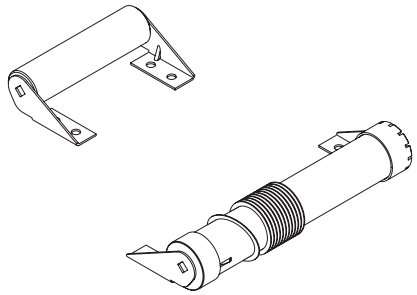

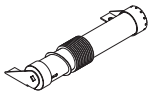

300.7581 Top-Lift **XS**
300.7583 Top-Lift **S**
300.7584 Top-Lift **M**
300.7871 Top-Lift **L**
300.7876 Top-Lift **XL**

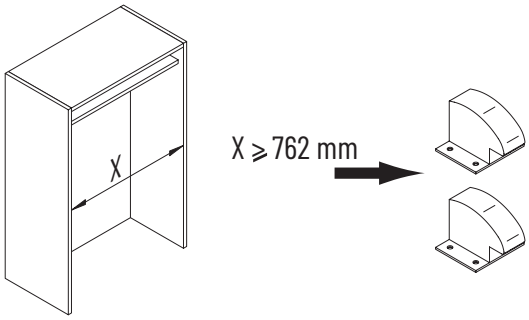

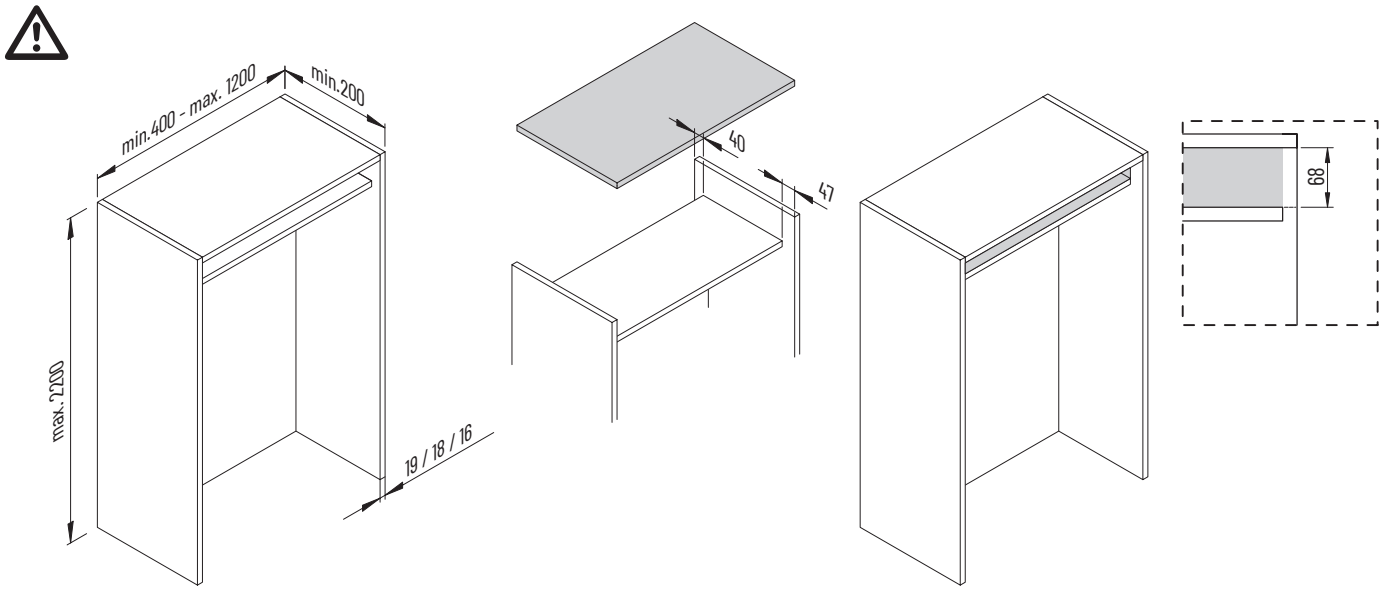

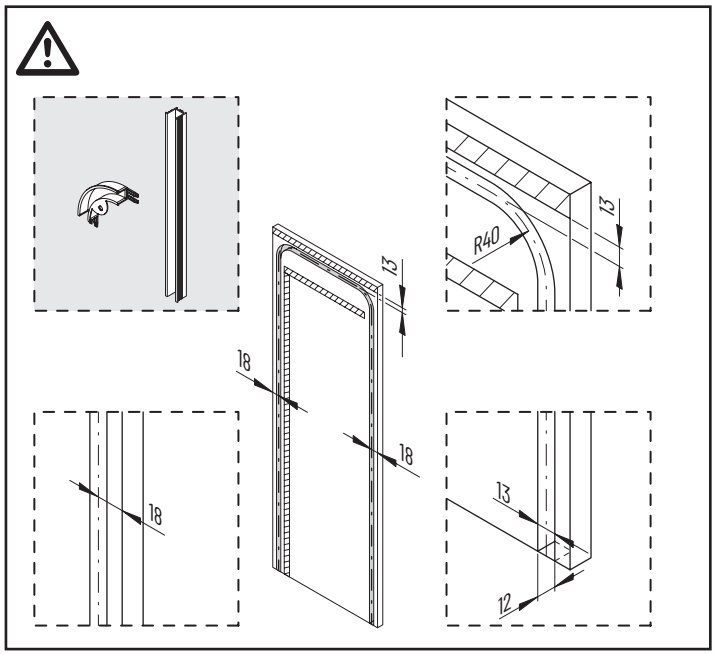
R40
13
13
18
18
18
13
12

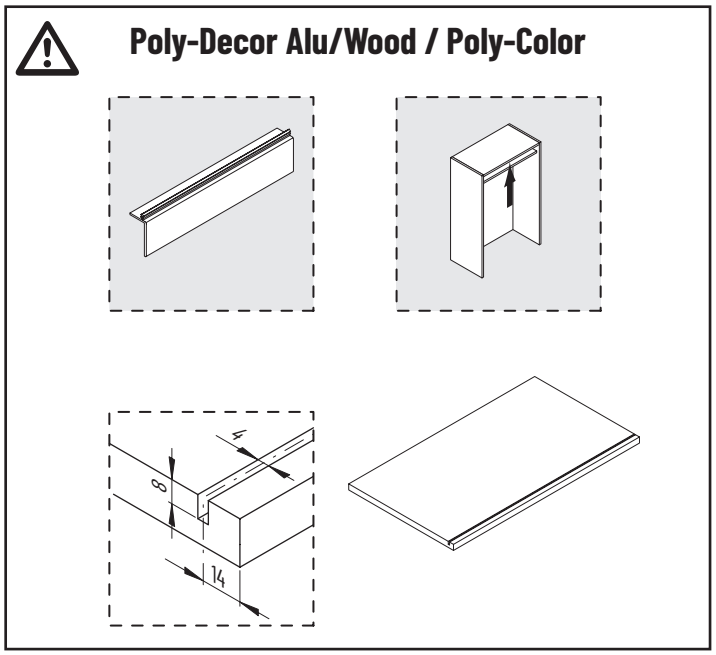
Poly-Decor Alu/Wood / Poly-Color
4
8
14

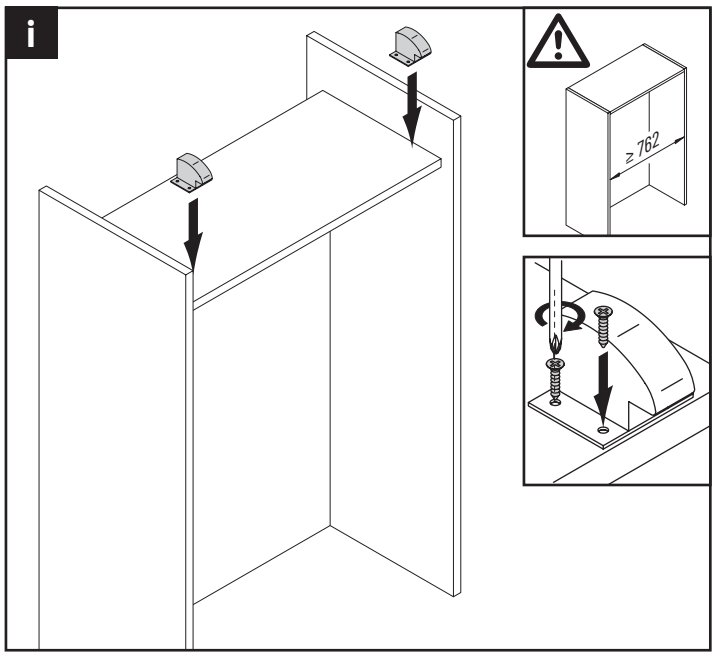
i
≥ 762

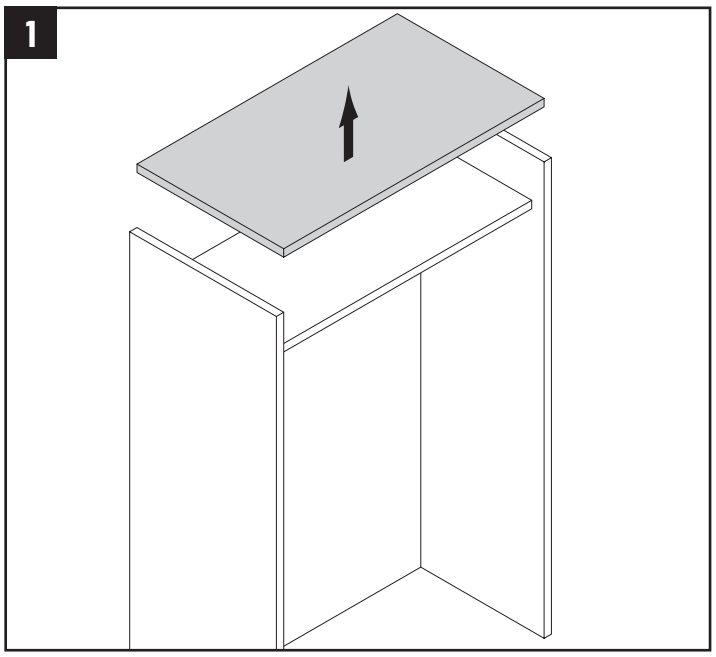
1

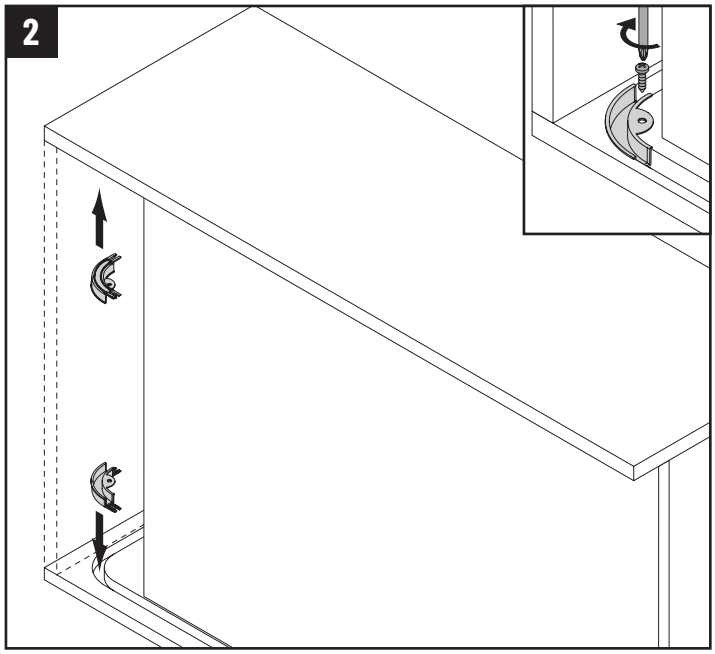
2

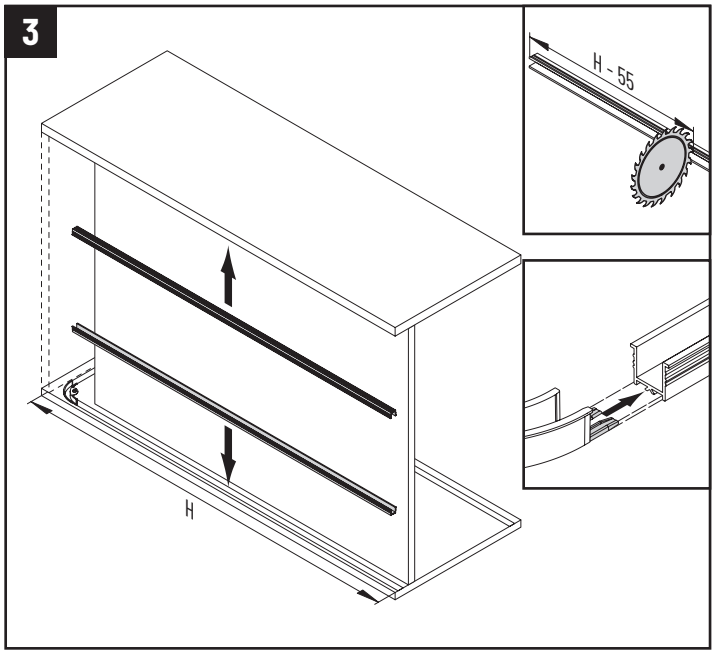
3
H - 55
H

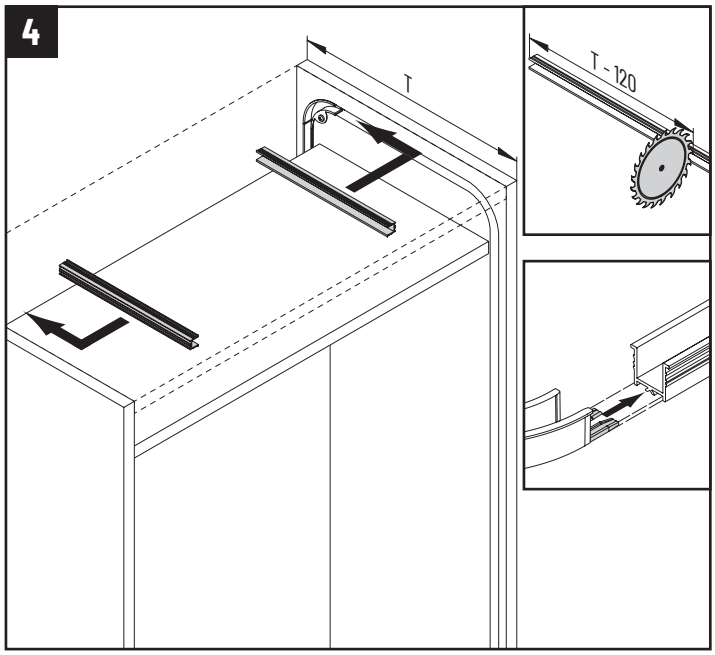
4
T
T - 120

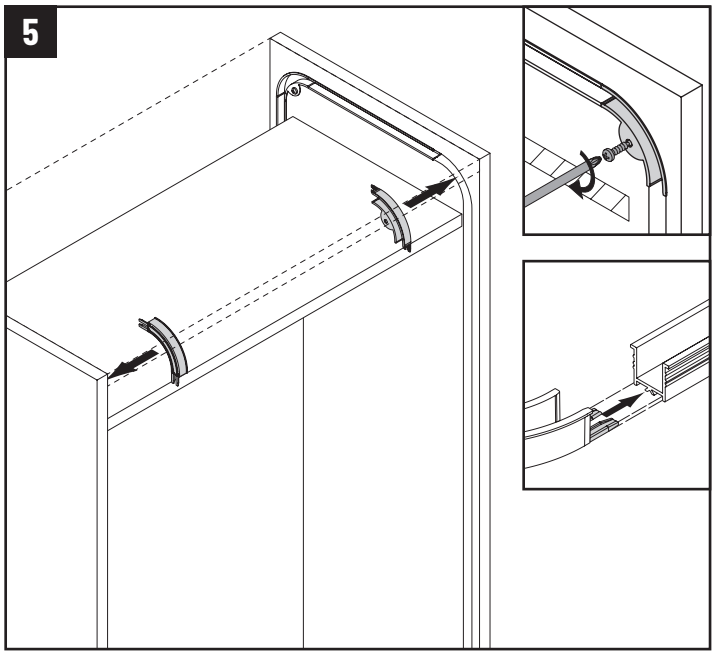
5

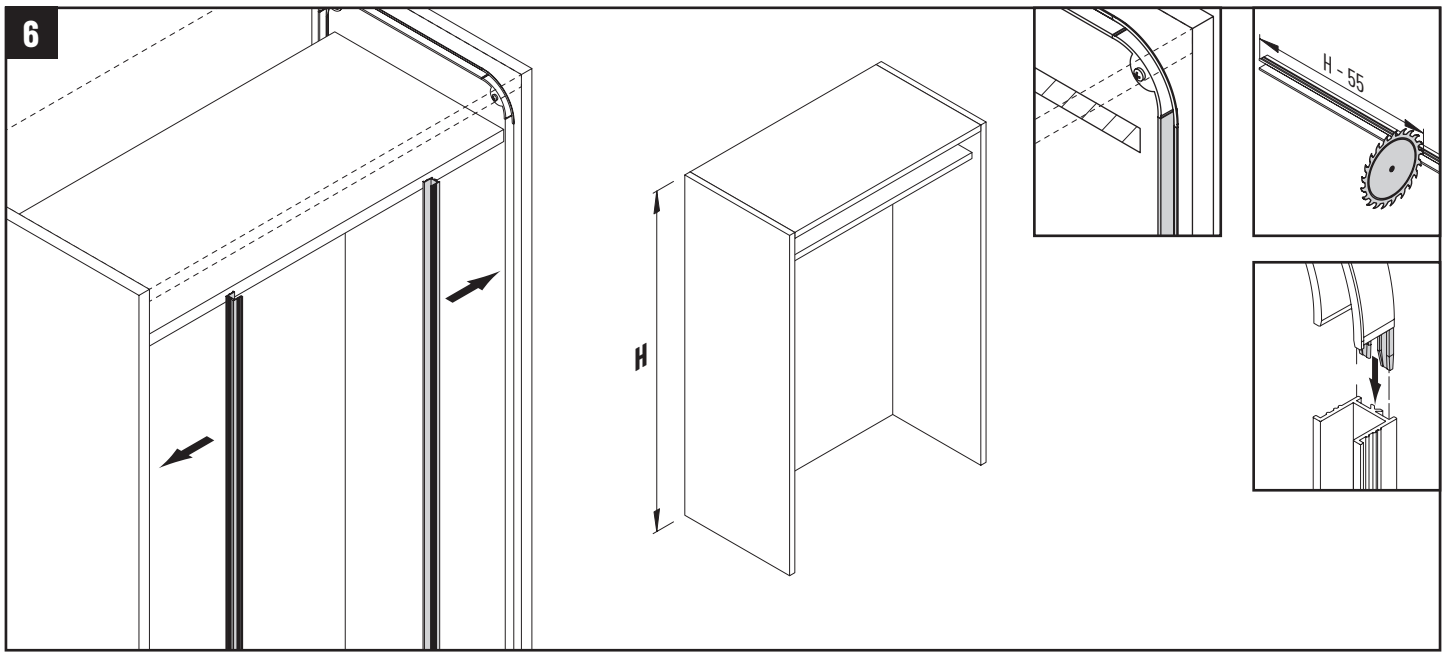
6
H
H - 55

7

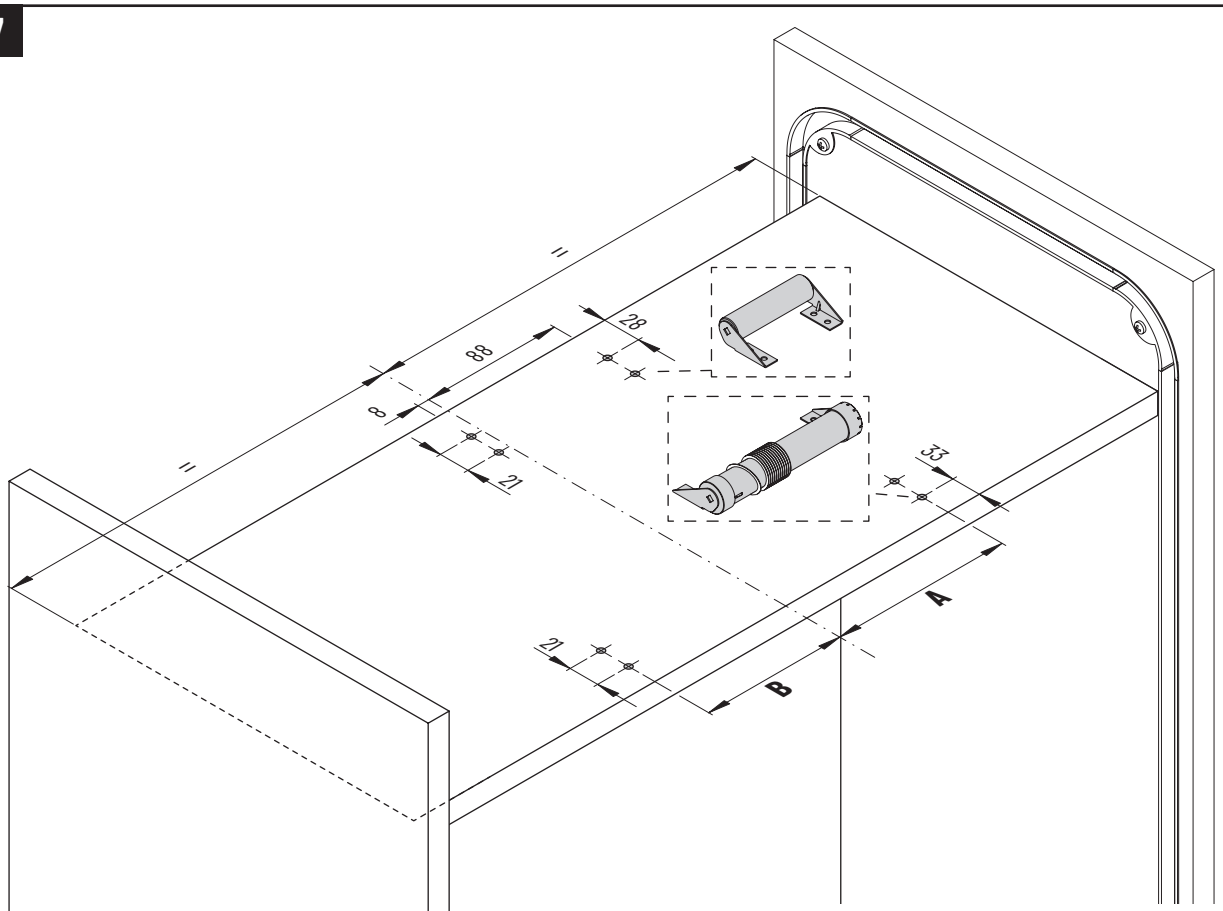

	A	B
300.7581 Top-Lift **XS**	102	90
300.7583 Top-Lift **S**	102	90
300.7584 Top-Lift **M**	124	100
300.7871 Top-Lift **L**	120	275
300.7876 Top-Lift **XL**	155	275

8

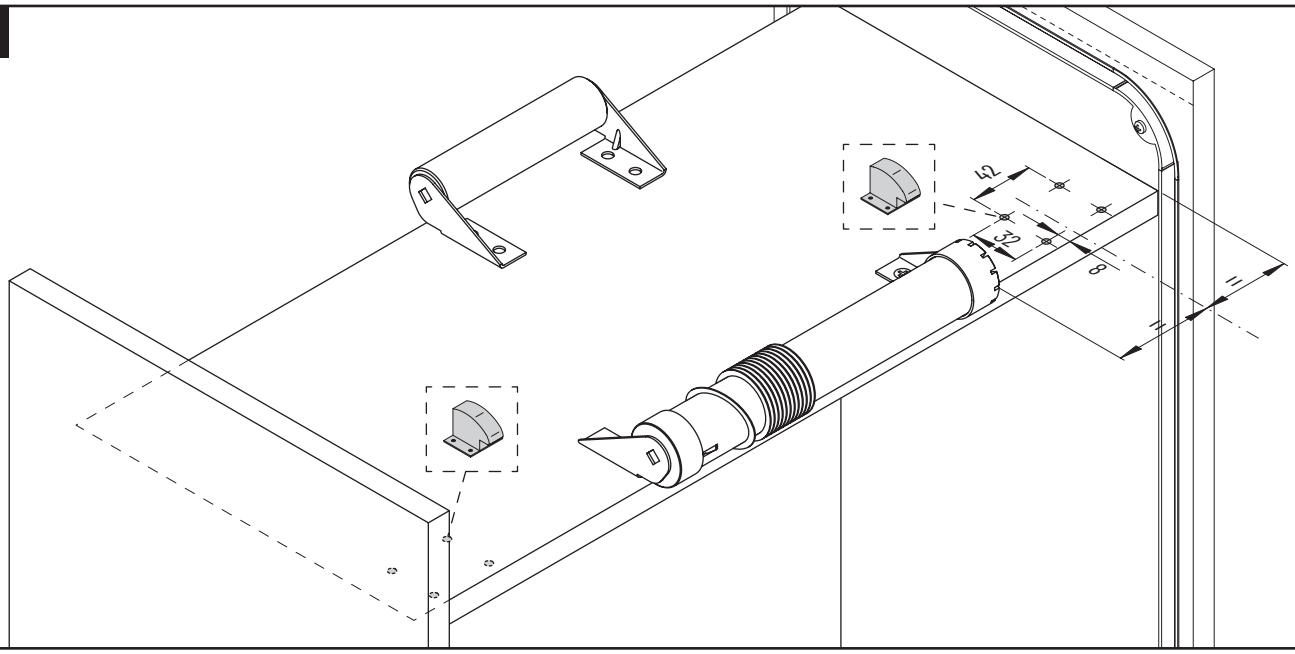

9

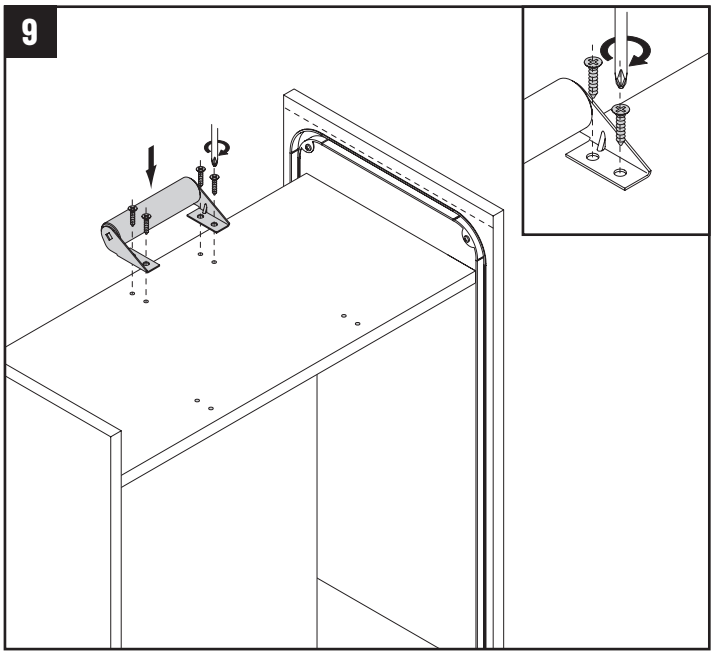

10

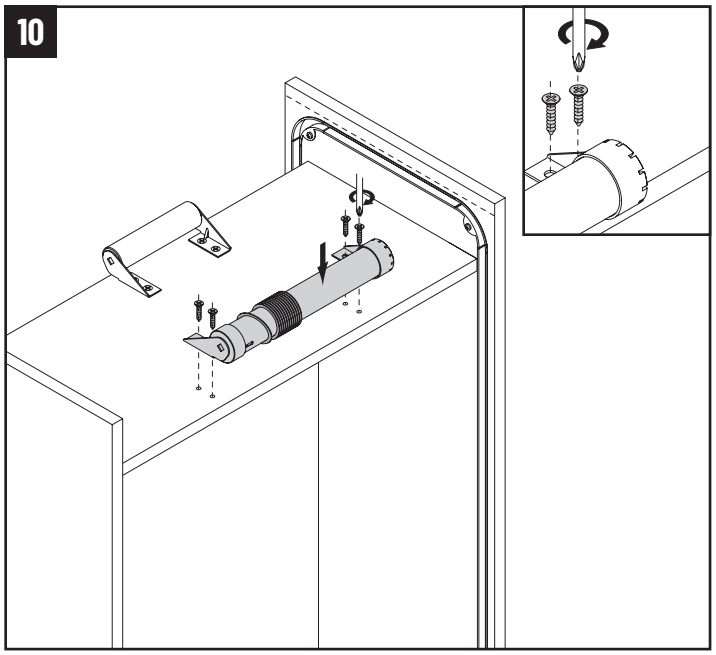

11

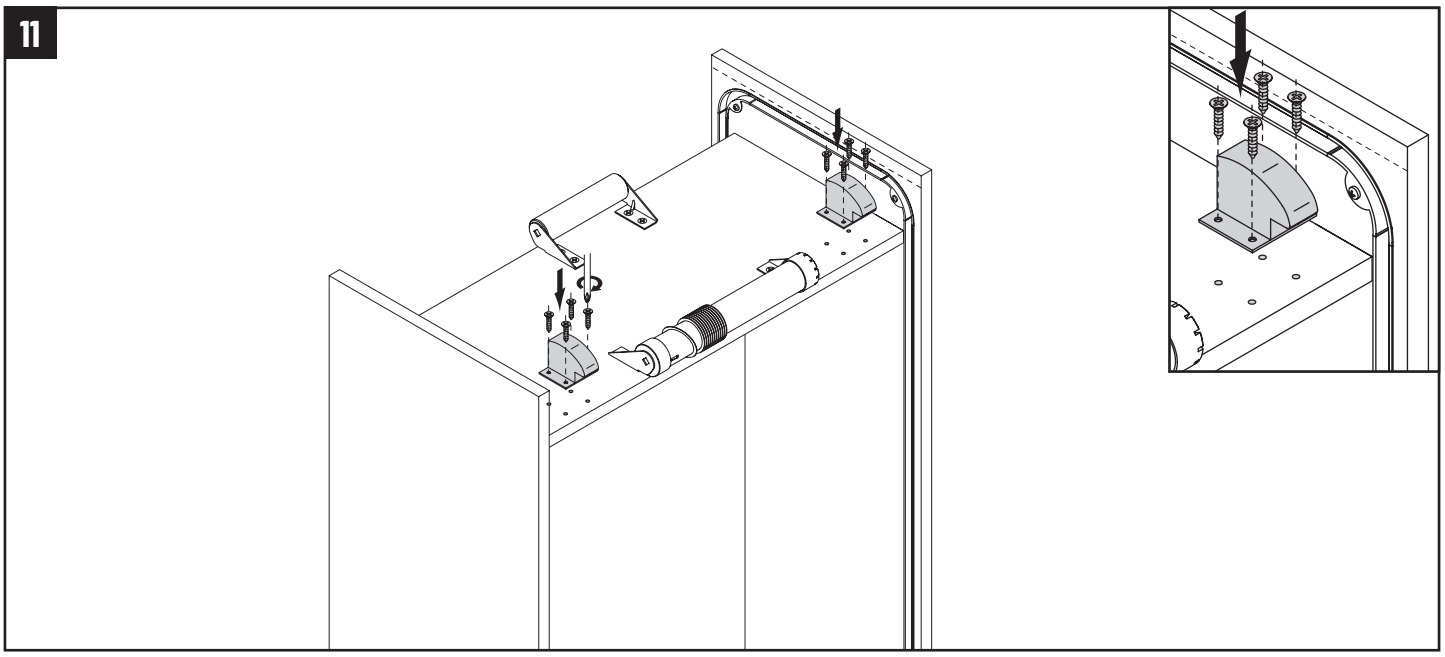

12

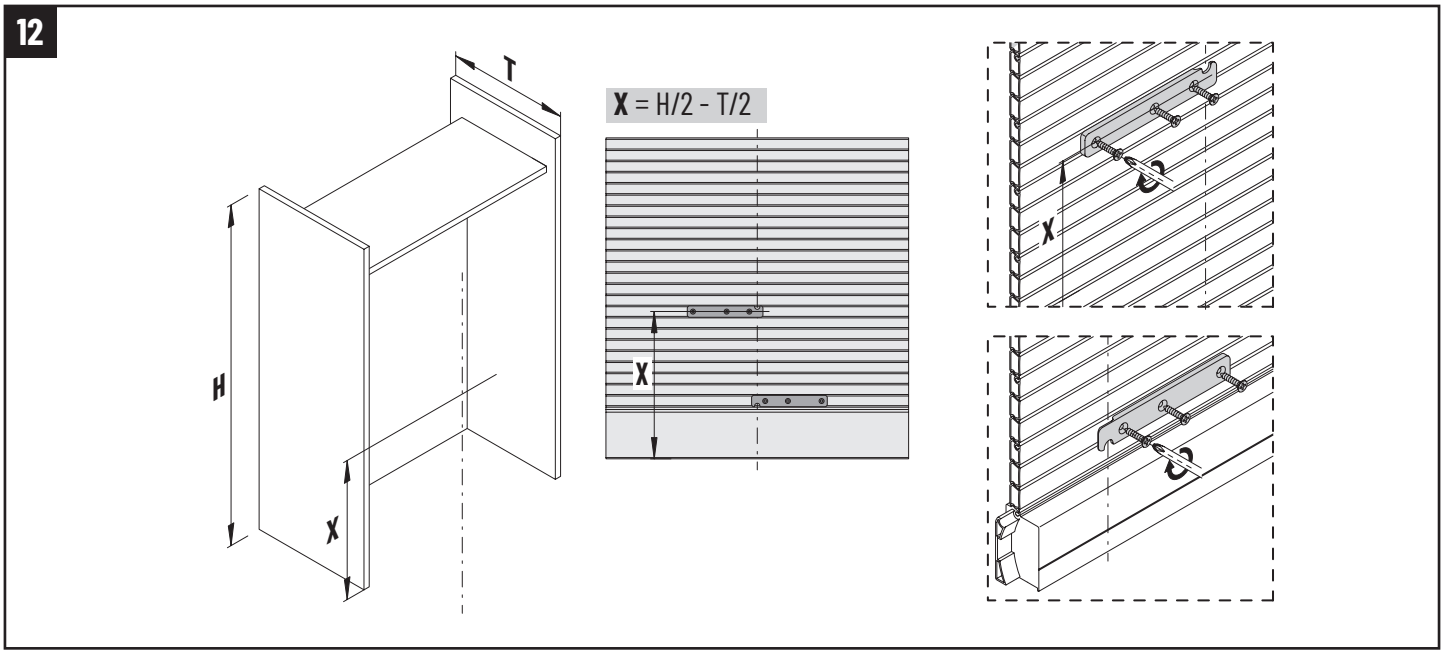

13

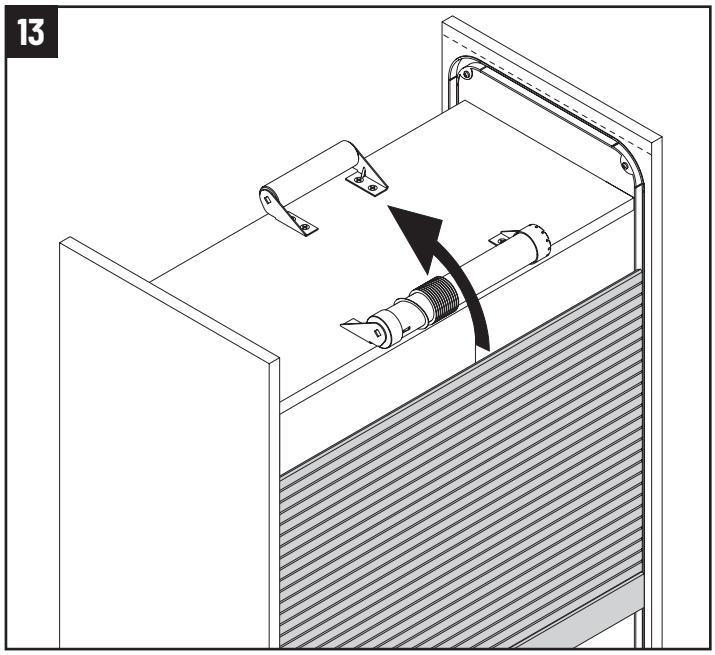

14

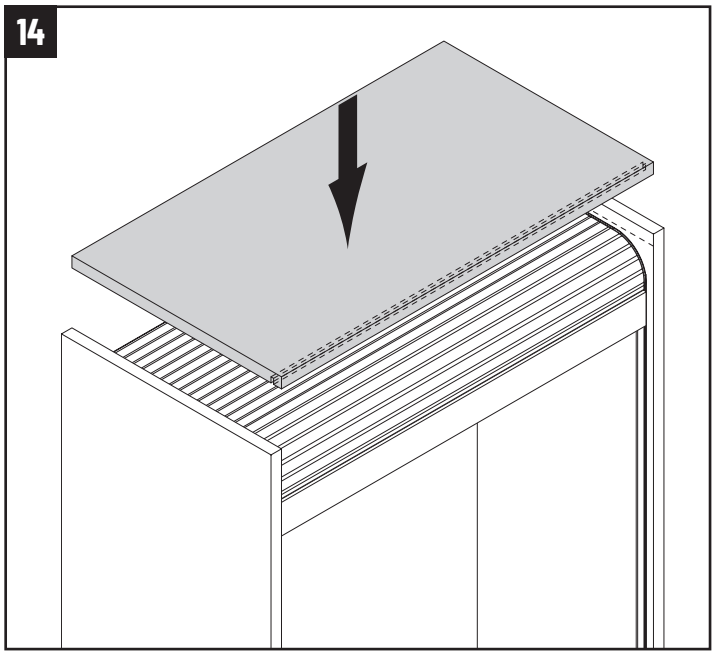

15

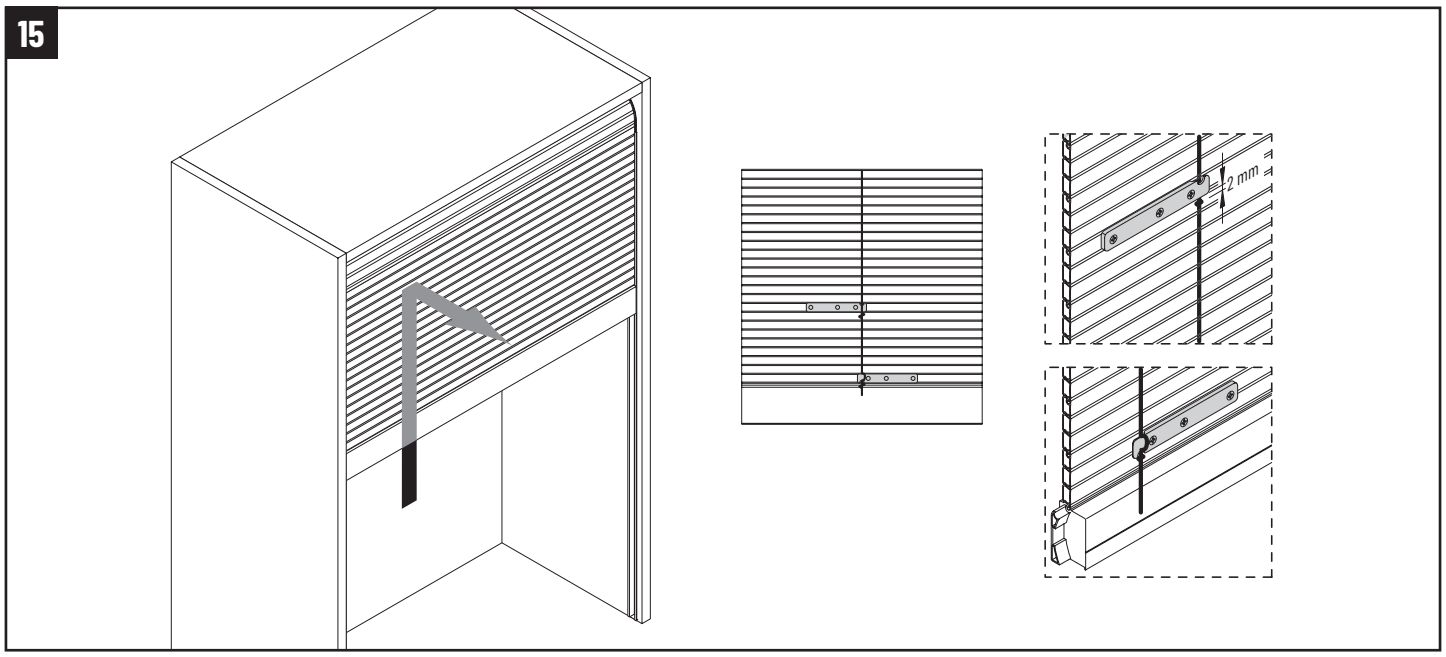

16

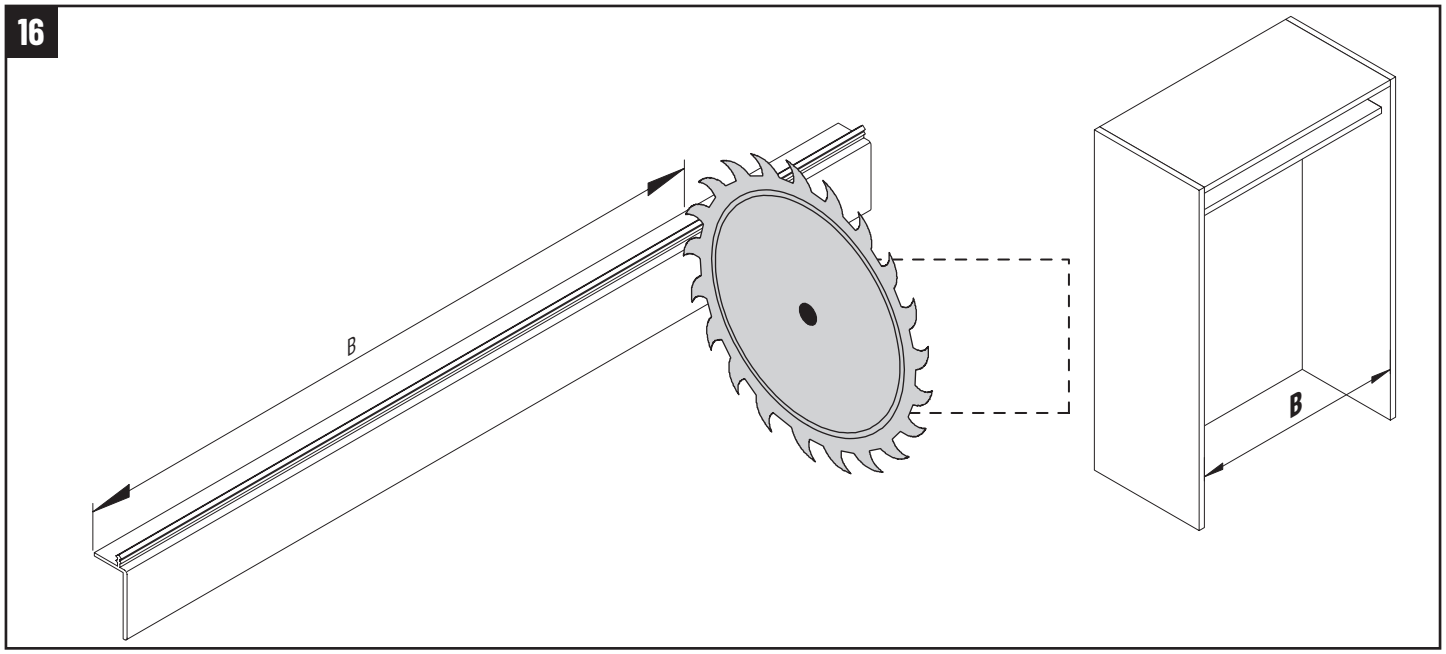

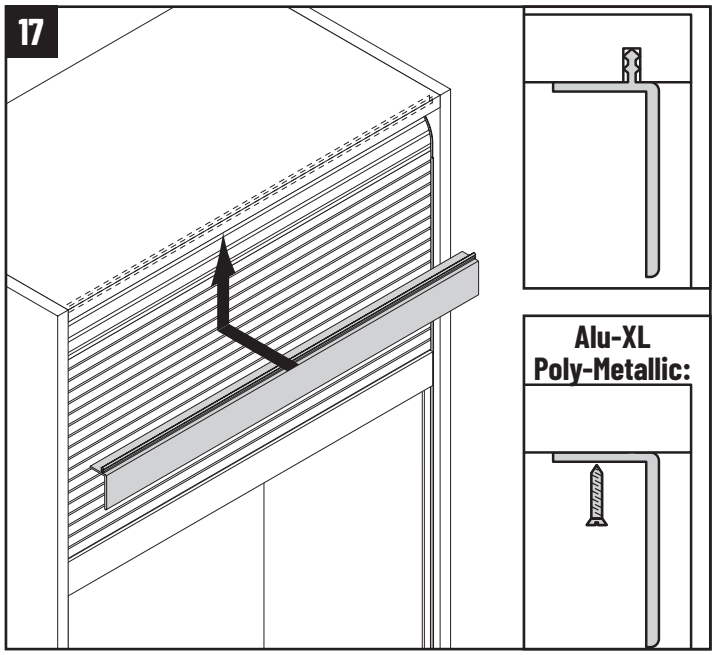
17
Alu-XL
Poly-Metallic:

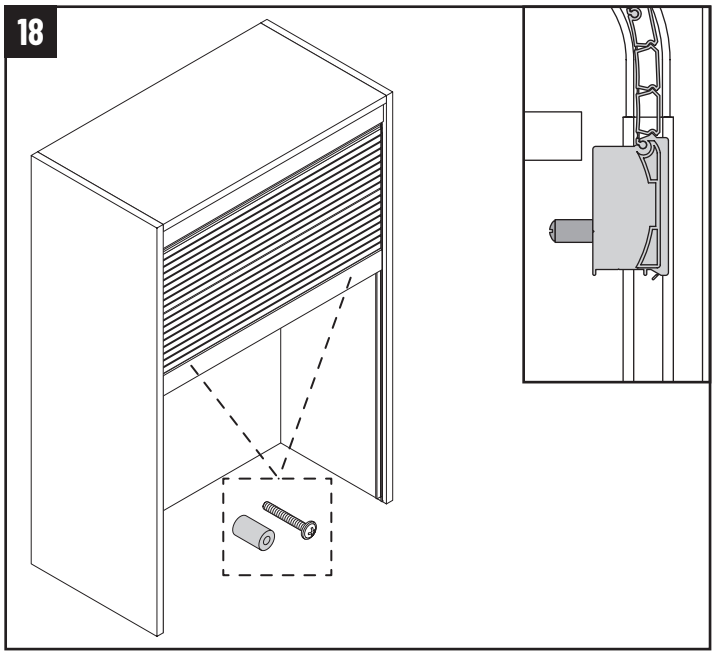
18

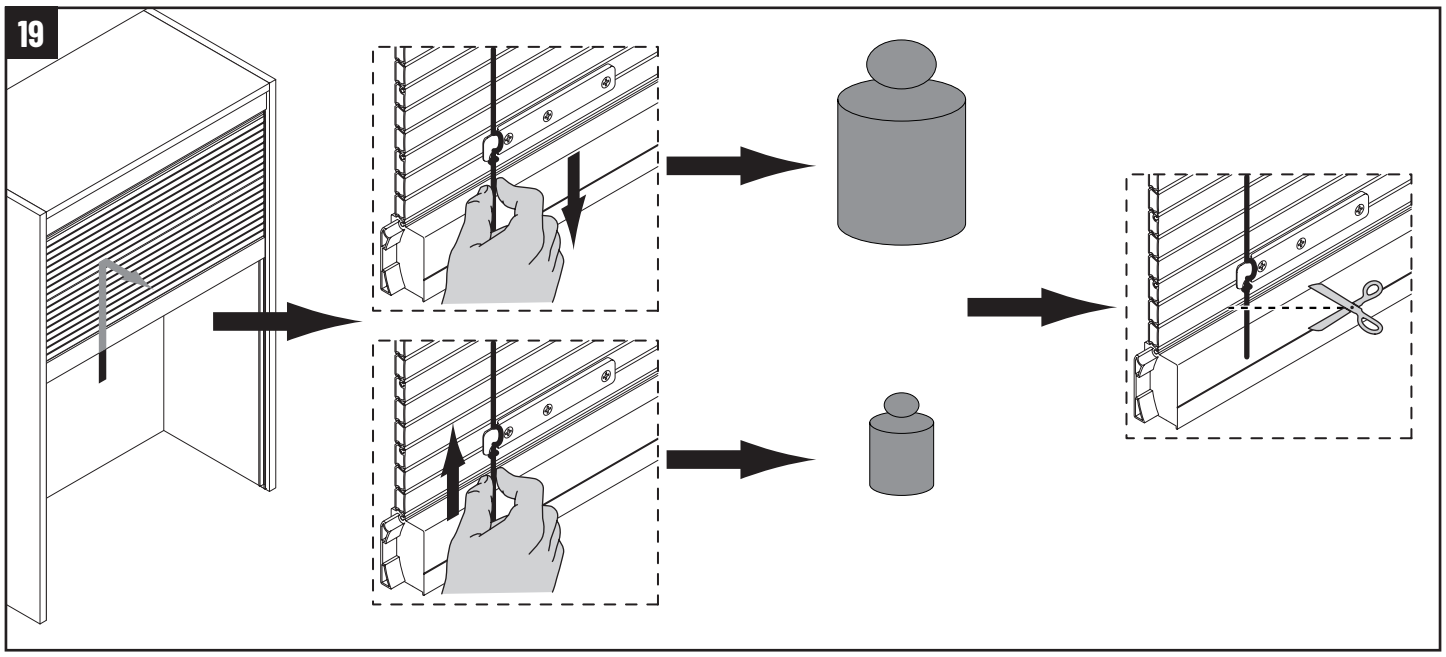
19

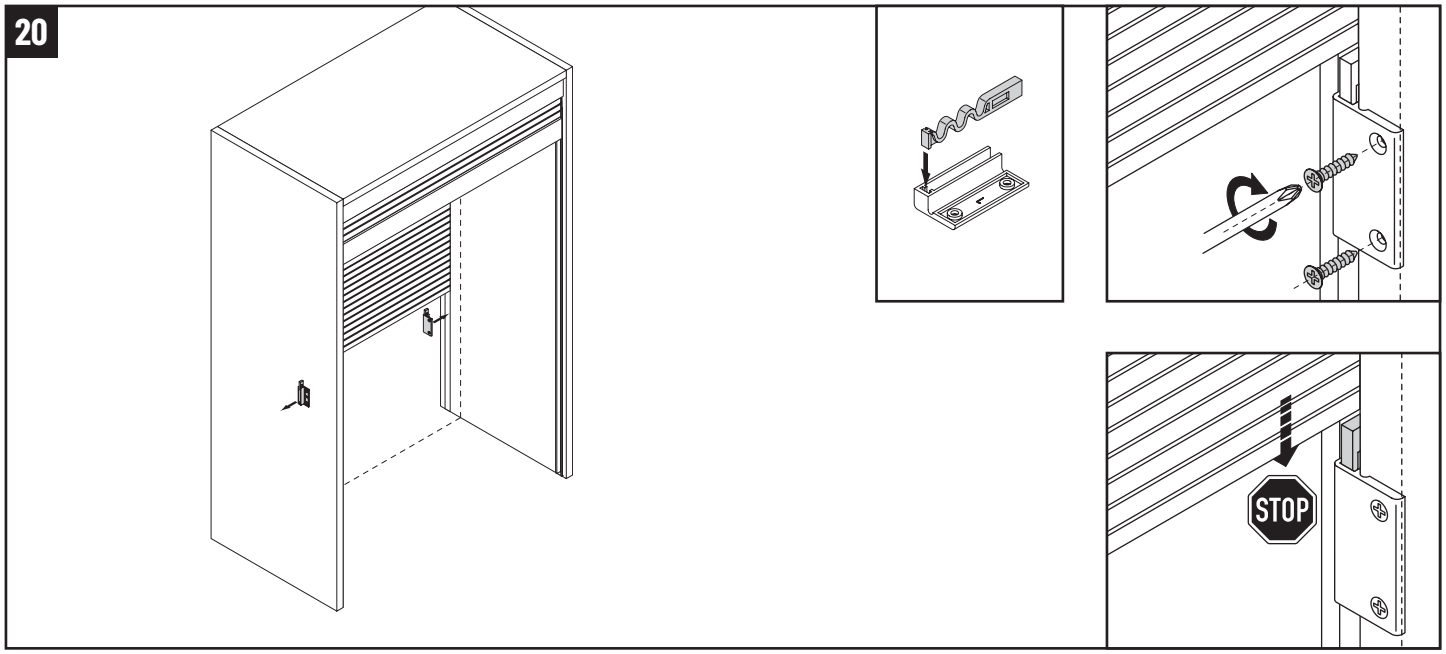
20
STOP