ASSEMBLY AND INSTALLATION INSTRUCTIONS

All dimensions in millimetres

Required space

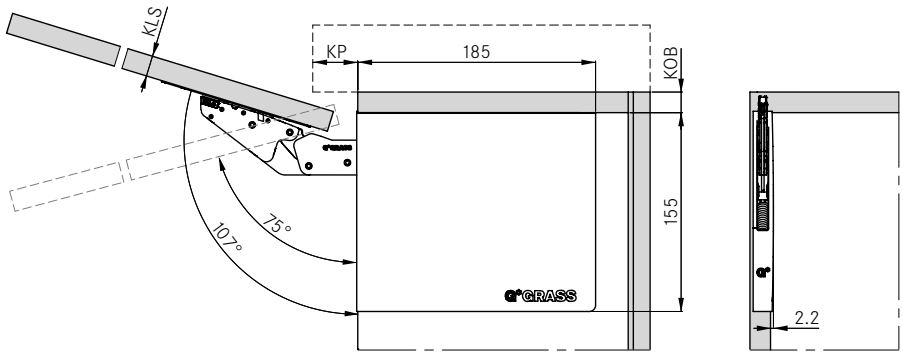

Tipmatic Pin

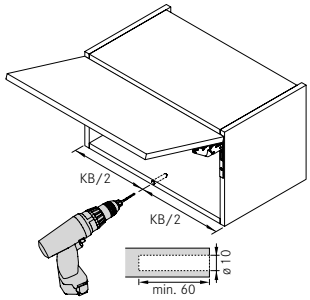

Side wall milling position

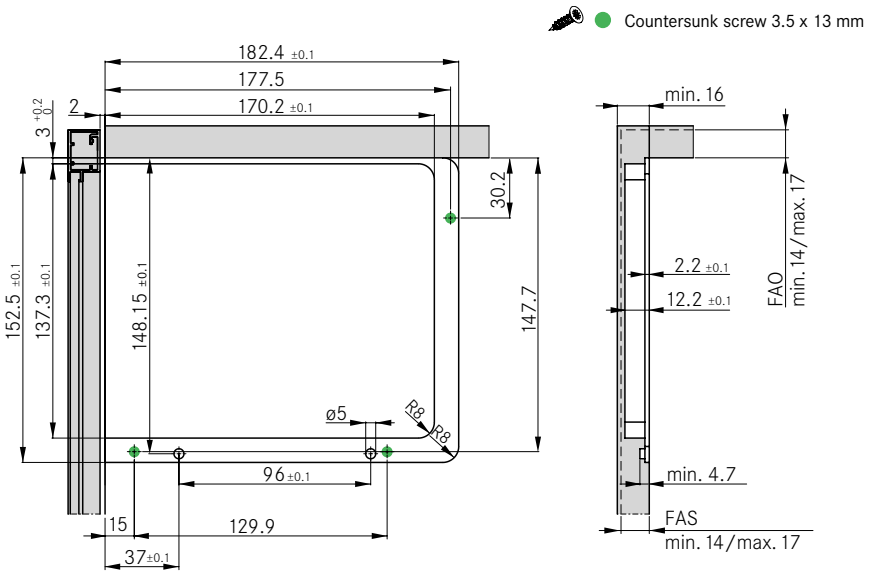

Calculation of power factor (LF)

Flap height (mm) x {flap weight (kg) + 2 x handle weight (kg)}

CORNICE

Flap thickness (KLS)	Cabinet top panel (KOB)					
	16	18	19	20	22	24
19	57	64	67	70	77	84
	Cornice (KP)					

FLAP WEIGHT

Flap height (KLH)	Power factor (LF)		
	250–550	500–1100	1000–2250
200	1.3–2.8	2.5–5.5	5.0–11.3
250	1.0–2.2	2.0–4.4	4.0–9.0
300	0.8–1.8	1.7–3.7	3.3–7.5
350	0.7–1.6	1.4–3.1	2.9–6.4
400	0.6–1.4	1.3–2.8	2.5–5.6
450	0.6–1.2	1.1–2.4	2.2–5.0
500	0.5–1.1	1.0–2.2	2.0–4.5
550	0.5–1.0	0.9–2.0	1.8–4.1
	Flap weight in kg		

WARNING

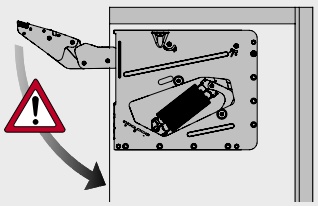

Important!
Caution – risk of injury!
Fitting is spring-tensioned!

LEGEND

FAO	Front overlay, top
FAS	Front overlay, side
KB	Cabinet width
KLS	Flap thickness
KOB	Cabinet top panel
KP	Cornice
LF	Power factor